County of Fairfax, Virginia
Planning Commission Meeting
November 4, 2026
Planning Commission Action

PROPOSED ZONING ORDINANCE AMENDMENT – ACCESSORY LIVING UNITS
(Countywide)

PLANNING COMMISSION RECOMMENDATIONS:
On November 4, 2026, the Planning Commission voted 10-0 (Commissioners Clarke and Landgraf were absent from the meeting) to recommend to the Board of Supervisors adoption of the proposed Zoning Ordinance Amendment for Accessory Living Units as set forth in the Staff Report dated September 29, 2026, with the staff recommended options, except with the following revisions to subsection 4102.7.B:

- Retain subsection (2) to read as shown in Option 2 of the Staff Report, "Either the accessory living unit or the principal dwelling unit must be owner-occupied at the time an accessory living unit is established.";

- Revise subsection (4) to read, "The accessory living unit may be occupied by no more than four people.";

- Retain subsection (10) to read as shown in Option 2 of the Staff Report, "The property must provide the number of on-site parking spaces(s) required for the principal dwelling unit as specified in Article 6."; and

- Revise subsection (13)(b) to read, "Detached on a lot that is a minimum of 15,000 square feet in size." And revise subsection (15)(a)1 to read, "A detached structure on a lot less than 15,000 square feet; or."

And that the amendment become effective at 12:01 a.m. the day following adoption.

The Planning Commission also voted 10-0 (Commissioners Clarke and Landgraf were absent from the meeting) to recommend to the Board of Supervisors the following follow-on motions:

- That the Board of Supervisors add the review of accessory structure building height to next year's Zoning Ordinance Work Program;

- That the Board of Supervisors direct staff to collect data on ALUs that are constructed and on reported obstacles to construction and issue a report to the Board of Supervisors by December 31, 2028, with research and recommendations for additional revisions to the ALU Zoning Ordinance standards; and

- That the Board of Supervisors direct staff to create and make widely available a package with helpful information about the steps needed in constructing and establishing an ALU to include checklists of County and other requirements, as well as drawings and pictures, as pertinent, to provide visual representation of the requirements. Further, this package should be completed in consultation with homeowner or civic associations.

ATTACHED DOCUMENTS:
Staff Report dated September 29, 2026

CD

FAIRFAX COUNTY

PROPOSED ZONING ORDINANCE AMENDMENT

STAFF REPORT
Accessory Living Units

September 29, 2026

Hearing Dates
Planning Commission: October 29, 2026 @ 7:30 p.m.
Board of Supervisors: November 17, 2026 @ 4:30 p.m.

Staff Contact
Casey Judge, Deputy Zoning Administrator
Carmen Bishop, AICP, Deputy Zoning Administrator

Americans with Disabilities Act (ADA): Reasonable accommodation is available upon 48 hours advance notice. For additional information on ADA call 703-324-1334 or TTY 711 (Virginia Relay Center).

PLANNING & DEVELOPMENT

Department of Planning and Development
Zoning Administration Division
12055 Government Center Parkway, Suite 801
Fairfax, Virginia 22035-5507
Phone 703-324-1314
Fax 703-803-6372

Table of Contents

Background 2
Proposed Changes 3
Community Outreach 13
Summary 14
Proposed Text 15

BACKGROUND

An accessory living unit (ALU) is a secondary dwelling unit established in conjunction with and clearly subordinate to a single-family detached dwelling unit. These living spaces include areas for eating, cooking, sleeping, living, and sanitation, and the space is occupied as a residence. ALU regulations were last updated in 2021 as part of the Zoning Ordinance Modernization project, and since that time, 230 administrative permits (APs) and 28 special permits (SPs) have been approved. Reports on the implementation of the new regulations were prepared in January 2023 and April 2024, and found that implementation has generally been smooth and in line with expected results; however, several potential amendment topics were identified.[1] Based on those reports, the amendment of the ALU regulations was included on the Zoning Ordinance Work Program as a first-tier topic to consider changes and clarifications, including standards for determining whether an ALU is attached or detached, the permitted unit size, the acreage requirement for detached ALUs, parking requirements, permit renewal and recordation, and other use-specific standards.

Current Regulations

Interior and detached ALUs are allowed on a lot with a single-family detached dwelling. Interior ALUs are allowed with approval of an AP (or an SP to modify certain standards), and detached ALUs are allowed on lots containing at least two acres with SP approval. Among other regulations included in subsection 4102.7.B of the Zoning Ordinance, all ALUs are limited to a maximum of two bedrooms and two people, and either the ALU or the principal dwelling unit must be owner-occupied.

An interior ALU is a defined area within the principal dwelling, which may be located in the basement or another part of an existing dwelling or a proposed addition. Administrative approval of an interior ALU requires compliance with a number of standards, including but not limited to:

- The ALU must be wholly contained within the structure of a dwelling with direct access through a finished, temperature controlled, and fully enclosed interior space;

[1] January 2023 and April 2024 reports are available under Related Resources on the amendment webpage: https://www.fairfaxcounty.gov/planning-development/zoning-ordinance/amendments/accessory-living-units

- Any new external entrance must be on the side or rear of the dwelling, and any proposed garage or carport must be located directly adjacent to any existing garage or carport and use the same associated driveway and curb cut that serves the principal dwelling;
- The size is limited to a maximum of 800 square feet or 40 percent of the principal dwelling (whichever is less), or the entirety of a basement or cellar existing as of May 10, 2023; and
- One additional on-site parking space beyond what is required for the principal dwelling unit must be provided.

For detached ALUs, the size is limited to 1,200 square feet of gross floor area and the ALU must be subordinate to the principal dwelling. The Board of Zoning Appeals (BZA) may impose development conditions as part of their review of the SP.

Other Jurisdictional Research

The ALU regulations for nearby jurisdictions are summarized in Attachment 1. Although the standards vary, localities appear to be striving to simplify ALU regulations. All of the jurisdictions reviewed allow ALUs by right or through an administrative process for approval, including for detached units, and do not have a minimum lot size requirement. Four of the six jurisdictions allow an ALU with duplex or townhouse dwellings. Most of the jurisdictions allow an ALU to be occupied by more than two people and do not require recordation or renewal of ALU approvals. Parking requirements vary from zero to two spaces. Although the attached table focuses on nearby jurisdictions, ALUs are a nationwide topic and are allowed in many localities. Staff has also reviewed the regulations for ALUs in certain other areas of the country, many of which appear to take similar approaches to our neighboring jurisdictions.

State Legislation

State legislation for the development and use of ALUs (referenced in the legislation as accessory dwelling units) was adopted this year and goes into effect on July 1, 2027.[2] However, the legislation exempted any locality that adopted an ordinance before January 1, 2026; therefore, the legislation does not apply to Fairfax County. References to standards in the legislation are included in this document for information and context only.

PROPOSED CHANGES

Overview

The amendment proposes to add flexibility and update the ALU regulations. The amendment proposes to streamline the process, remove unnecessary requirements, update the standards to align more closely with those of surrounding jurisdictions, and allow more lots the opportunity to have a detached ALU; however, the amendment does not propose to change the

[2] Senate Bill 531: https://lis.blob.core.windows.net/files/1223191.PDF

permissions to allow an ALU with a single-family attached dwelling.[3] As further detailed below, staff recommends the Board consider the following:

- Remove the zoning administrative permit requirement for by-right approvals. Building permits will still be required in many instances.
- Remove the renewal and recordation requirements for both by-right and special permit approvals.
- Revise the two-acre minimum lot size and special permit requirement for a detached ALU to allow a detached ALU by right on a lot that is a minimum of 36,000 square feet in size and with special permit approval on a smaller lot.
- Apply the general standards for freestanding accessory structures to detached ALUs. These include location and setback standards. For lots that are less than 36,000 square feet in size, these include a 20-foot height limit and a maximum cumulative square footage.[4] For lots that are 36,000 square feet or larger, the amendment would require a detached ALU to be subordinate to the principal dwelling and have a maximum height of 35 feet.
- Revise the maximum size requirement for both an interior and detached ALU to be 1,200 square feet or 40% of the principal dwelling, with a larger size permitted with SP approval.
- Remove the owner occupancy requirement.
- Increase maximum occupancy of an ALU to three people.
- Remove the additional parking requirement.
- Remove standards that are addressed by other codes and procedures.
- Clarify the definition and other use-specific standards.

For some provisions, the amendment includes alternative options for consideration. Retaining the current standards is an option as well.

By-Right Process

As noted above, an interior ALU that meets the applicable standards is currently allowed by right, but an administrative permit (AP) is required. This is a separate zoning permit that is processed concurrently with any related building permits and requires an additional fee. The proposed amendment would remove the requirement for a zoning AP for interior ALUs and for detached ALUs on lots 36,000 square feet (SF) or more in size that meet the standards. An option is included in the text to retain the AP process. Detached ALUs are discussed further below. Establishing an ALU often includes construction to configure rooms and install appliances and all construction is subject to applicable building codes. As such, review for compliance with the Zoning Ordinance standards would take place as part of the standard

[3] An option is included for consideration that would allow an ALU in single-family attached dwellings with SP approval.

[4] Maximum height and cumulative square footage can be increased with special permit approval per subsection 4102.7.A(6)(c) and (d), and setbacks can be reduced in accordance with subsection 5100.2.D(11)(e).

review by the Zoning Permit Section of any related building permit for a new building or addition/alteration, thus streamlining the process, removing the separate application fee, and reducing a perceived regulatory barrier, which could encourage more ALUs to be established in the County. ALUs would continue to be required to meet the Zoning Ordinance standards, like all other by-right uses. For situations where no new building permit is needed, a review could take place upon request if a property owner would like documentation that the proposed ALU complies with the Zoning Ordinance, or upon receipt of a complaint. Although staff previously indicated that it may not be possible to track the number of ALUs without the AP process, staff has since confirmed that PLUS is already configured to allow for tracking of ALUs as part of building permit applications. The proposed amendment also includes codification of the second kitchen certification to facilitate building permit reviews. This certification process would allow areas containing a second kitchen that are not used as an ALU (such as an entertaining area in a basement) to be documented and approved.

Renewal and Recordation

The proposed amendment deletes the permit renewal and recordation requirements. Without an AP, these requirements would no longer be applicable; however, it is recommended to remove these requirements even if the AP process is retained. The amendment also removes the renewal and recordation requirements with SP approval. An option is included in the text to revise the renewal requirement timeframe to five years if the AP process is retained.

The initial two-year renewal timeframe was intended to allow for another review after a short period of time since the AP standards were new in 2021; however, implementation of the standards has generally been smooth. While review for compliance with the Zoning Ordinance standards should be part of the review to establish an ALU as part of any related special permit or building permit application, ongoing reviews appear to represent an unnecessary step in the process.

Regarding recordation, it was initially thought that the requirement would provide notice to a future property owner of the ALU approval; however, since the permit does not transfer to a new owner, it has likely resulted in misunderstandings and an unnecessary step in the process, which may also be perceived as a barrier by potential applicants.[5]

Minimum Lot Size for Detached ALUs

As noted above, a detached ALU currently requires a two-acre minimum lot size and SP approval. The proposed amendment would allow a detached ALU on a lot 36,000 square feet (0.83 acre) in size or larger as part of the by-right process, and would require SP approval on smaller lots. This approach takes into account community feedback that included both support for retaining and removing the SP (public hearing process).

[5] The only other use standard in the Zoning Ordinance for requiring recordation of an approval in the land records is for farmworker housing.

Regarding the SP process, the nearby jurisdictions that were reviewed do not require a public hearing for detached ALUs. Similarly, the state legislation requires detached accessory dwellings to be approved with an administrative permit. Staff has also heard reluctance from builders to undertake ALU projects that are subject to the uncertainty of a public hearing approval process. However, as further described below, the SP process affords the opportunity for the imposition of development conditions based on a site-specific review, which could address community concerns with allowing a detached unit on a smaller lot.

Regarding lot size, the nearby jurisdictions that were reviewed do not have a minimum lot size requirement. Approximately five percent of the single-family detached dwellings in the County are on lots of two acres or more, limiting the opportunity for this housing option.[6] An additional nine percent of single-family detached dwellings are on lots 36,000 square feet to two acres in size. Community feedback on lot size for a detached ALU was requested as part of the community survey and the April community meetings with questions about sample lots in the R-1, R-2, and R-3 Districts. The survey responses are shown in the table below.

Table 1: Percent of Respondents in Support of Allowing a Detached ALU

District (Minimum Lot Size)	Total	Administrative (public hearing not required)	With SP (public hearing required)
R-1 (36,000 SF/0.83 ac)	71%	50%	21%
R-2 (15,000 SF/0.34 ac)	61%	40%	21%
R-3 (10,500 SF/0.24 ac)	53%	33%	20%

The draft text dated June 30, 2026, included a minimum lot size of 15,000 square feet for a detached ALU to be approved by SP; however, during outreach, numerous homeowners with properties less than 15,000 square feet in size expressed an interest in building a detached unit. Removing the minimum lot size would expand the opportunity to have a detached ALU to additional lots. Therefore, the amendment does not include a minimum lot size for a detached ALU to be approved by SP.[7] The 36,000-square foot threshold is used for other standards in the Zoning Ordinance, including to differentiate requirements for freestanding accessory structures. For smaller lots, the SP process would require a site-specific review with a public hearing. Among other requirements for SP approval, the proposed use, including its design,

[6] Percentage based on the number and lot size for single-family detached dwellings in the conventional districts that allow ALUs and the corresponding planned districts.

[7] Alternative options in the text include: a) requiring a minimum lot size of 15,000 square feet (with a range from 10,500 square feet to two acres) for a detached ALU approved by SP; and b) revising the minimum lot size of 36,000 square feet for a by-right detached ALU.

must not adversely affect the use or future development of neighboring properties.[8] It is also noted that other freestanding accessory structures, such as a garage or workshop are permitted by right with the same setback and height requirements – the distinction being that the ALU is used for sleeping and residential occupancy.

Height, Setbacks, and Coverage Limitations for a Detached ALU

Height limits along with setbacks, location, and coverage standards serve to minimize the view of accessory structures from surrounding lots. Currently, on lots that are 36,000 square feet or less, freestanding accessory structures are limited to a maximum height of 20 feet, measured from the highest point of the structure to the lowest point on the finished ground level, and an increase in height may be approved with an SP. On larger lots, while there is no specific maximum height for an accessory structure, the structure still needs to be subordinate to the principal dwelling. The proposed amendment would require that a detached ALU comply with the general standards for other freestanding accessory structures, including the maximum height of 20 feet on lots less than 36,000 square feet in size.[9] For lots 36,000 square feet or larger, the proposed text specifies that a detached ALU must be subordinate to the principal dwelling and limited to a maximum height of 35 feet (the maximum height for the principal dwelling), but the height would be measured as other accessory structures are – from the lowest point of finished ground level to the highest point of the structure.[10]

Regarding location and setbacks, an accessory structure is not allowed in a front yard on a lot that is 36,000 square feet or less, and if the structure is over 12 feet in height, it must be located out of the side setback (e.g., 20 feet in the R-1 District) and a distance equal to the height of the structure from the rear lot line. Any detached ALU located within the rear setback (usually 25 feet from the rear lot line) would also be subject to the maximum rear setback coverage limitation, which is typically 30% of the minimum rear setback area (depending on district and lot size).

Maximum Size of an ALU

Currently, the Zoning Ordinance limits an interior ALU to 800 square feet or 40% of the size of the principal dwelling (whichever is less) with an SP option to allow the BZA to increase the size; an ALU may also occupy the entirety of a basement or cellar, regardless of the size, but only if

---

[8] Standards for SP Uses, subsection 4102.1.F: https://online.encodeplus.com/regs/fairfaxcounty-va/doc-viewer.aspx#secid-2769

[9] Subsection 4102.7.A(6): https://online.encodeplus.com/regs/fairfaxcounty-va/doc-viewer.aspx#secid-2553

[10] The proposed amendment would set the threshold for a by-right detached ALU and associated height and other limits to include lots that are 36,000 square feet or larger in size. By including lots that are 36,000 square feet, it would treat all lots in an R-1 District subdivision similarly, even those with the minimum lot size for the district of 36,000 square feet. The general standards for freestanding accessory structures set the threshold as greater than 36,000 square feet (rather than 36,000 square or more). For consistency, it is recommended that the general standards be revised as part of the Zoning Ordinance amendment for accessory structures that is currently on the Zoning Ordinance Work Program.

the basement or cellar existed as of May 10, 2023. Staff proposes increasing the 800-square-foot maximum size to 1,200 square feet while maintaining the 40% limitation to ensure the area continues to be accessory and subordinate to the principal dwelling. This size is consistent with the maximum allowable size of a detached ALU, as well as the average size approved by SP where often the ALU space is in an existing addition or proposed on top of an existing space (such as a finished area over an existing garage). The 1,200-square-foot size is also consistent with size limitations used by other jurisdictions such as Loudoun County and Montgomery County. Staff recommends removing the date and permitting the use of the entire basement for all dwellings, regardless of construction date. A basement or cellar is generally not visible from the street and, in most instances, is less than 50 percent of the size of the dwelling. Allowing use of the entire basement for an ALU often results in a more practical layout, as well.

A detached ALU is currently allowed to be up to 1,200 square feet in size, with no ability for the BZA to consider a larger size. While 1,200 square feet is a reasonable maximum size for a two-bedroom ALU, there have been circumstances where an existing structure was being renovated for an ALU and the size exceeded 1,200 square feet. Re-using an existing structure can have environmental and other benefits. Therefore, it is recommended that the BZA be permitted to modify the maximum size as part of an SP process.

The height, setback, and coverage standards discussed above may also serve as a limit on size of a proposed ALU based on the size and configuration of a specific lot. In addition, subsection 4102.7.A(6)(d) includes a maximum cumulative square footage standard that applies to lots 36,000 square feet in size or less. The standard limits the cumulative square footage of all freestanding accessory structures on a lot to 50 percent of the gross floor area of the dwelling; however, the BZA may approved an increase in size as part of an SP application.

Owner Occupancy

The Zoning Ordinance currently requires the owner to live on a property with an ALU, either in the principal unit or in the ALU. The proposed amendment would remove this requirement to allow for more flexibility in the long-term use of an ALU. For example, under the current requirement, military families stationed in the area would be precluded from renting a dwelling with an ALU for use by a caregiver or an older family member. In addition, concerns have been raised regarding the impact an ongoing owner-occupancy restriction has on financing, as financial institutions and lenders may be reluctant to provide financing due to the limitation it places on successive owners who will not be able to rent out or lease their dwelling, which might be necessary as a result of a divorce, job transfer, or death.[11] Staff has also received feedback that the non-transferability of an approval to a new owner can be a deterrent to the

[11] AARP Accessory Dwelling Units Model State Act and Local Ordinance: https://www.aarp.org/content/dam/aarp/livable-communities/housing/2021/AARP ADU Model State Act and Local Ordinance-0212021-08.pdf#page=44

ongoing use of an ALU, reducing their effectiveness as a viable housing option. Further, dwellings without ALUs are not required to be owner occupied.

Feedback has also been received that owner occupancy serves to support property maintenance and accountability. However, property maintenance is subject to code enforcement and varies among individual owners and renters. Concerns have also been raised about investor-owned properties. Based on information from the Department of Tax Administration (DTA) and other sources, currently, investor acquisition of large numbers of single-family detached dwellings does not appear to be a major issue in Fairfax County.[12]

The state legislation allows localities to require owner occupancy only at the time an ALU application is submitted. Similarly, most nearby jurisdictions do not have an owner occupancy requirement, or the requirement is applied only when the permit is issued, not as an ongoing condition. The amendment text includes an option to require owner occupancy when the ALU is established.

Maximum Occupancy of an ALU

Occupancy of an ALU is currently limited to two people, and staff proposes to increase this to three people (with a range of two to four people provided for consideration). A dwelling without an ALU that is occupied by two or more people related by blood or marriage and any number of children may also include up to two roomers or boarders. The difference between the by-right occupancy standard and an ALU (given that both allow non-related "tenants") is that an ALU is configured as a separate unit, an independent space that includes separate eating and cooking facilities. Staff has received requests for various scenarios that would benefit from allowing up to three or four people to occupy an ALU, such as an older couple or a person(s) with a disability with a live-in caregiver, or a couple that has one or two children. Most nearby jurisdictions allow three to four people to occupy an ALU.

The proposed text also includes editorial revisions to the occupancy standard for the principal unit to reference the general occupancy standards and note the exceptions. As with other Zoning Ordinance standards, occupancy of a dwelling is enforced on a complaint basis.

Parking

Currently, before approval of an administrative permit for an ALU, staff confirms that the property has the required number of off-street parking spaces for the dwelling plus one additional space. (Under new state legislation related to parking, the additional parking space is not required in designated areas, which include areas within ½-mile of a Metro, bus rapid transit, Amtrak, or other public transportation station or facility, because that legislation limits the parking requirement to one space per single-family dwelling or 0.5 space in multifamily

[12] DTA data includes that there are 23 owners that have 10 or more properties, with the single largest number of properties being 22.

buildings and mixed-use developments.)[13] Also, in the R-1 through R-4 Districts, the Zoning Ordinance limits the maximum coverage of the front yard for parking to 25 to 30 percent.[14]

The proposed amendment would remove the requirement for additional parking, and therefore eliminate review of parking for establishment of an ALU. This change would be consistent with other accessory uses in the Zoning Ordinance because no other accessory uses require additional parking beyond the requirement for the principal use. Community input regarding parking has been mixed, with some noting that there is no limit on the number of vehicles per dwelling for a home without an ALU, that often an ALU is occupied by a family member, and that an older individual may not have a vehicle. It was suggested that parking should not be required near Metro or frequent bus routes or in walkable, mixed-use areas. On the other hand, concerns have been noted, particularly around areas with limited parking, such as cul-de-sacs and areas with crowded streets. In the community survey, 50% of respondents indicated that the current requirement for an additional parking space should remain.

The amendment text includes an option for consideration to require that the minimum number of spaces for a single-family detached dwelling be provided but to not require an additional space for an ALU. This option (Option 2) would not allow an ALU on a property that does not have the requisite parking for the single-family detached dwelling (i.e., is noncompliant with today's parking standards), unless the required parking was added.

Single-Family Attached Dwellings

Some of the nearby jurisdictions allow an ALU with duplex or townhouse dwellings in addition to single-family detached dwellings. Additionally, the state legislation permits interior and detached accessory dwelling units with both detached and attached single-family dwellings. In the community survey, 52% responded that an ALU should not be allowed in a townhouse, with parking being a primary concern. Given the parking limitations in many townhouse communities in Fairfax, the proposed amendment maintains the requirement that an ALU be permitted only in association with a single-family detached dwelling unit, but it includes an option for consideration to allow an interior ALU with a single-family attached dwelling with special permit approval. The special permit process could consider if parking and other concerns are addressed on a site-specific basis.

Additional Clarifications

The proposed amendment includes other clarifications, reorganization, and editorial revisions. The amendment clarifies when an arrangement constitutes an ALU with new graphics depicting typical ALU arrangements and edits to the definition of an ALU. The revised definition specifies that a kitchen includes permanent provisions for food preparation and cooking (such as a stove,

---

[13] *See* Virginia Code § 15.2-2209.4 and Parking Tier Map with designated areas: https://experience.arcgis.com/experience/22f6d903b36c403ba253f9f51174cec2

[14] Subsection 6100.2.B(1): https://online.encodeplus.com/regs/fairfaxcounty-va/doc-viewer.aspx#secid-2572

oven, or range) and does not include a wet bar with plug-in food preparation appliances (such as a microwave or air fryer). The proposed text also expresses that an interior ALU must meet specific standards to maintain the external appearance of a single-family detached dwelling, not a duplex. The focus should remain on the external appearance, rather than the interior layout.

Figure 1: Semi-detached ALU



In addition, connection requirements are clarified. The connection to an interior ALU must be fully enclosed, but the requirements for the connection to be finished and temperature controlled are removed. That would allow, for instance, access through a garage to an ALU located over an attached garage. Also, the text specifies that an ALU is considered semi-detached if the unit is connected by a hallway, enclosed breezeway, or similar feature that has an external width of 12 feet or less. This 12-foot width distinguishes between what may be considered an addition to the home versus a semi-detached configuration. The amendment specifies that if the length of the connection to a semi-detached ALU is ten feet or less, then the ALU would be considered interior, and if the length of the connection is more than ten feet, the ALU would be considered detached. Applicants have proposed semi-detached configurations, likely because of the minimum lot size and special permit process for a detached ALU. The proposed changes are intended to provide clarity and reduce the need for zoning interpretations, and the proposed dimensions for connections are based on a review of applications.

Figure 2: Left: Connection is less than 12 feet wide and is considered semi-detached; since the connection is more than 10 feet long, the ALU is subject to the detached ALU regulations. Right: the connection is more than 12 feet wide and is considered an addition (not semi-detached).

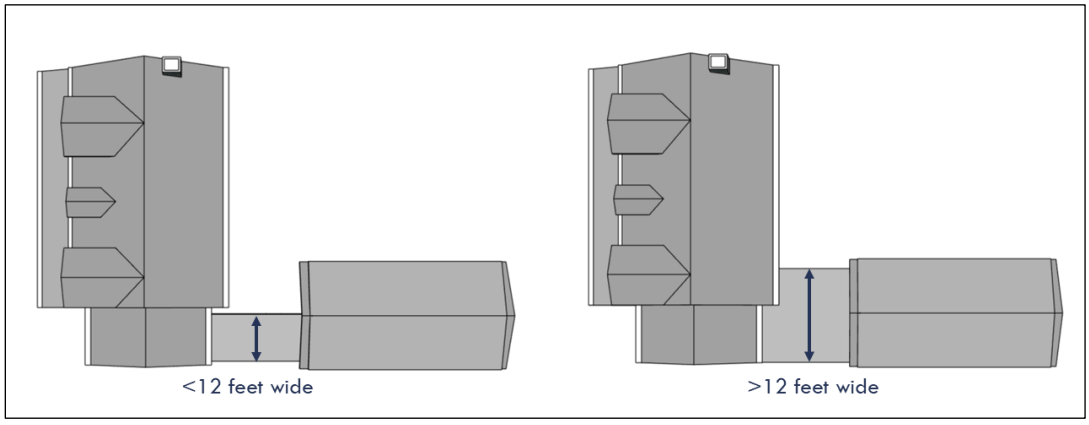

The proposed amendment deletes the following standards, as they are found to not be necessary or are already required by another code:

- "An accessory living unit must meet all applicable regulations for building, safety, health, and sanitation …"
    - An ALU is already required to meet all other applicable regulations without restating the requirement in the Zoning Ordinance.
- "If the dwelling is served by a well or septic system, the applicant must obtain Health Department approval prior to administrative permit or special permit approval."
    - Comments have been received expressing concerns about ALUs on properties that are served by well or septic systems. All permits involving interior alterations are routed to the Health Department for review. Adding bedrooms always requires additional review of the well and septic system capacity before approval of the building or alteration permit. An ALU that does not involve the creation of new bedrooms would not require any expansion of an existing well or septic system.
- "The accessory living unit must have a working multi-purpose fire extinguisher and smoke and carbon monoxide detectors (when required for a fireplace or gas service) that are interconnected with the principal dwelling."
    - The building code already requires a fire extinguisher in every kitchen area. Further, the building code also requires a fire alarm system that is installed in a manner that will activate all notification appliances within both dwelling units for an interior ALU. For a detached ALU located less than ten feet from the principal dwelling, either the system must be interconnected, or applicable fire rated walls must be provided. The interconnection requirement also applies to carbon monoxide alarms when their installation is required.

Lastly, existing ALU standards that are proposed to remain as is, or with minor edits, include:

- No more than one ALU is allowed per lot.
- Any new external entrance must be on the side or rear of the dwelling; any proposed garage or carport must be adjacent to any existing garage or carport; any driveway or curb cut must be the same as that which serves the principal dwelling. These standards can be modified by the BZA with SP approval.
- Maximum of two bedrooms.
- Occupancy of the principal dwelling by two or more persons related by blood or marriage and any number of their children; one or two persons with their children; or a group of up to four unrelated persons, functioning as a single household.
- If the ALU standards are no longer met, the ALU may not be occupied as a dwelling unit, and the property must meet occupancy limitations for a single-family dwelling. Kitchen or other facilities do not need to be removed. A reference is added to the second kitchen certification, and this long-standing practice is proposed to be codified under subsection 8100.8 pertaining to the zoning review of building permits.

COMMUNITY OUTREACH

Over the past year, the proposed amendment has been discussed at two Board of Supervisors Land Use Policy Committee meetings, two Planning Commission Land Use Process Review Committee meetings, a Board of Zoning Appeals meeting, six virtual community meetings, a CREDA/NVBIA[15] meeting, and numerous small group and individual discussions, emails, and correspondence with community members. In addition, feedback was solicited through a community survey this spring, which resulted in over 1,800 participants.[16] This summer, a Community Toolkit was created to facilitate discussion and feedback by HOAs and other neighborhood groups.[17]

Various perspectives and comments have been offered from the community regarding the proposed amendment. Support has been expressed for expanding opportunities for ALUs as an important option for housing affordability, to allow aging parents or caregivers to live near family, for seniors to age in place, and to provide more flexible and equitable housing options. Concerns have also been noted about increased density and impacts to neighborhood character, parking, traffic, septic systems, and other infrastructure, as well as corporate investment in dwellings.

Feedback about the process has included questions about homeowner association (HOA) and other private restrictions that may limit the ability to establish an ALU. Comments have been expressed in support of and in opposition to HOA limitations. However, in accordance with the Code of Virginia and Zoning Ordinance provisions, the County may not require the approval of a property owners association or consider private agreements or other provisions in the implementation and enforcement of the Zoning Ordinance (Section 1106 of the Zoning Ordinance and Va. Code Sect. 15.2-110).

Questions have also been raised about the use of ALUs for short-term lodging. Short-term lodging is a separate use under the Zoning Ordinance that requires issuance of an AP and is subject to the standards in subsection 4102.7.O. The Zoning Ordinance prohibits short-term lodging on a lot with an ALU.

In addition, questions have been raised about whether a potential increase in the number of ALUs may impact school capacity, wastewater systems, and septic systems. As an accessory and

[15] Northern Virginia Commercial Real Estate Development Association/Northern Virginia Building Industry Association

[16] Summary of community survey results (slides 6 – 17): https://www.fairfaxcounty.gov/planning-development/sites/planning-development/files/Assets/Documents/zoning ordinance/proposed amendments/ALU-presentation-april-2026.pdf

Community survey responses: https://www.fairfaxcounty.gov/planning-development/sites/planning-development/files/Assets/Documents/zoning ordinance/proposed amendments/ALU-Survey-Responses.pdf

[17] Community toolkit: https://engage.fairfaxcounty.gov/alu-community-toolkit

subordinate component of a residential property, an ALU is not considered a separate dwelling for demographic or other purposes. The same student yield ratio for all single-family detached dwellings, regardless of size, number of bedrooms, or number of children, is used Countywide to calculate the impacts on schools, and the ratio is recalculated by Fairfax County Public Schools staff on an as-needed basis. It should be noted that when a dwelling without an ALU is occupied by two or more persons related by blood or marriage and any number of their children, it may also include two roomers or boarders. On the other hand, a dwelling with an ALU, when occupied similarly, may not have two roomers or boarders and the ALU occupancy is proposed to be increased to three persons, resulting in a potential increase of only one child. For wastewater planning purposes, the same sewer generation rate is used for all dwellings in the County, regardless of size, so an ALU with up to two bedrooms would not alter the review process. The review process for septic systems is discussed above.

SUMMARY

Overall, the proposed revisions would streamline the process, remove unnecessary requirements, and further update the ALU regulations. Staff recommends approval of the proposed amendment, including Option 1 where numbered options are presented, with an effective date of 12:01 a.m. on the day following adoption.

PROPOSED TEXT

PROPOSED AMENDMENT TO
CHAPTER 112.2 (ZONING) OF THE 1976 CODE OF THE COUNTY OF FAIRFAX, VIRGINIA
RELATING TO ACCESSORY LIVING UNITS

At a regular meeting of the Board of Supervisors of Fairfax County, Virginia, held in the Board Auditorium, Lobby Level, Government Center Building, 12000 Government Center Parkway, Fairfax, Virginia, on Tuesday, November 17, 2026, the Board, after having first given notice of its intention so to do, in the manner prescribed by law, adopted an amendment to Chapter 112.2 (Zoning) of the 1976 code of the County of Fairfax, Virginia, said amendment so adopted being in the words and figures following:

Be it ordained by the Board of Supervisors of Fairfax County, Virginia:

Amend Chapter 112.2 (Zoning Ordinance), as follows:

In the revisions shown below, text to be deleted is identified with ~~strike-through~~ and text to be added is underlined. Any footnotes are descriptive and will not be included in the Zoning Ordinance. The standards have been reorganized. For clarity, the renumbering and reorganization is not shown. Options for consideration are provided ***[in brackets, italics and bold]***. When an option is presented as a range, the Board may approve any number within the range. The proposed changes are based on the adopted Zoning Ordinance in effect as of July 1, 2026.

INSTRUCTION #1: Revise the permissions for an accessory living unit in Tables 4101.1 and 4101.2 to replace administrative permit (AP) with accessory (A). ***[If ALUs are allowed in single-family attached dwellings by special permit, add SP to R-12, R-16, and R-20 in Table 4101.1 and to the secondary use column for PRM in Table 4101.2.]***

TABLE 4101.1: Use Table for Residential, Commercial, and Industrial Districts
P = permitted; SE = special exception; SP = special permit; blank cell = not allowed
A = allowed as accessory use only; A+ = permitted as an associated service use; AP = allowed with approval of administrative permit

Use	Residential Districts														Commercial Districts								Industrial Districts						Use-Specific Standards NOTE: General Standards also apply
	R-A	R-C	R-E	R-1	R-2	R-3	R-4	R-5	R-8	R-12	R-16	R-20	R-30	R-MHP	C-1	C-2	C-3	C-4	C-5	C-6	C-7	C-8	I-I	I-2	I-3	I-4	I-5	I-6	
Accessory Uses																													
Accessory Living Unit	~~AP~~ A SP	~~AP~~ A SP	~~AP~~ A SP	~~AP~~ A SP	~~AP~~ A SP	~~AP~~ A SP	~~AP~~ A SP	~~AP~~ A SP	~~AP~~ A SP																				~~4102.1.I~~ 4102.7.B

TABLE 4101.2: Use Table for Planned Development Districts

✓ = permitted if shown on final development plan/PRC development plan and PRC plan;
✓/SE = permitted if shown on final development plan/PRC development plan and PRC plan, or as special exception if not on plan(s)
SE = special exception; SP = special permit; blank cell = not allowed
A = allowed as accessory use only; A+ = permitted as an associated service use;
AP = allowed with approval of administrative permit

Use	PDH		PRC					PDC		PRM		PTC	PCC		Use-Specific Standards NOTE: General Standards also apply
	Principal	Secondary	Residential	Neighborhood Convenience Center	Village Center	Town Center	Convention/ Conference Center	Principal	Secondary	Principal	Secondary		Principal	Secondary	
Accessory Uses															
Accessory Living Unit		~~AP~~ A SP	~~AP~~ A SP	~~AP~~ A SP	~~AP~~ A SP	~~AP~~ A SP	~~AP~~ A SP		~~AP~~ A SP			~~AP~~ A SP			~~4102.1.I~~ 4102.7.B

INSTRUCTION #2: Revise subsection 4102.7.B – Accessory Living Unit use-specific standards. Re-number, re-letter, and update cross-references as needed.

B. Accessory Living Unit

Standards applicable to all accessory living units:

(1) ***Option 1:*** An accessory living unit is ~~permitted~~ allowed only in association with a single-family detached dwelling unit.~~, and no~~ No more than one accessory living unit is ~~permitted~~ allowed on a single-family lot. An accessory living unit is not deemed to be a subdivision of the lot.

Option 2: Subject to the additional standards below, an interior or a detached ~~An~~ accessory living unit is ~~permitted~~ allowed ~~only in association with~~ as follows:[18]

(a) An interior unit or a detached unit is allowed in association with a single-family detached dwelling unit; and

(b) An interior unit is allowed in a single-family attached dwelling unit only with special permit approval.~~, and~~

No~~no~~ more than one accessory living unit is ~~permitted~~ allowed on a single-family lot. An accessory living unit is not deemed to be a subdivision of the lot.

[18] If this option is adopted to allow an interior ALU in a single-family attached dwelling by SP, also add a new subsection (16): "The BZA may approve an interior accessory living unit in a single-family attached dwelling."

(2) ***Option 1:*** ***Delete current standard.*** ~~Either the accessory living unit or the principal dwelling unit must be owner-occupied.~~

Option 2: Either the accessory living unit or the principal dwelling unit must be owner-occupied at the time an accessory living unit is established.

(3) The principal single-family dwelling unit may be occupied in accordance with subsections 4102.3.A(1), (2), and (3), except it may not include roomers or boarders. ~~by not more than one of the following:~~

~~**(a)** Two or more persons related by blood or marriage and any number of their natural children, foster children, stepchildren, adopted children, or children in kinship care;~~

~~**(b)** One or two persons with their dependent children, including natural children, foster children, stepchildren, adopted children, or children in kinship care, functioning as a single household; or~~

~~**(c)** A group of not more than four persons not related by blood or marriage, functioning as a single household.~~

(4) The accessory living unit may be occupied by no more than ~~two~~ three ***[two to four]*** people.

(5) The accessory living unit may ~~not contain more than~~ have a maximum of two bedrooms.

(6) The accessory living unit must not exceed:

(a) 1,200 ~~800~~ square feet of gross floor area or 40~~%~~ percent of the gross floor area of the principal dwelling, whichever is less; or

(b) The entirety of the basement or cellar for an interior ALU ~~may be used, up to the size of the basement or cellar as of May 10, 2023~~.

(c) A larger size may be allowed by special permit in accordance with subsection 8100.4.

(7) For the purpose of determining the size of an accessory living unit ~~approved either by administrative permit or special permit~~, regardless of the definition in Article 9, gross floor area includes the area of any basement or cellar having a structural headroom of six feet six inches or more, but does not include a garage.

~~**(9)** An accessory living unit must meet all applicable regulations for building, safety, health, and sanitation, and the construction of an accessory living unit is not deemed to be a subdivision of the lot on which the dwelling is located. If the dwelling is served by a well or septic system, the applicant must obtain Health Department approval prior to administrative permit or special permit approval.~~

~~**(10)** The accessory living unit must have a working multi-purpose fire extinguisher and smoke and carbon monoxide detectors (when required for a fireplace or gas service) that are interconnected with the principal dwelling.~~

(8) A detached accessory living unit must comply with the regulations for freestanding accessory structures in subsection 4102.7.A(6), unless modified by the BZA if permitted.

(9) A detached accessory living unit on a lot that is a minimum of 36,000 square feet is subject to a maximum height of 35 feet, measured from the highest point of the

structure to the lowest point of finished ground level adjacent to the structure, and must be subordinate to the principal dwelling.

(10) ***Option 1:*** ***Delete current standard.*** ~~As specified in Article 6, a dwelling with an accessory living unit must provide the number of on-site parking spaces required for the principal dwelling unit, plus one additional space. Only one space serving the lot must provide convenient access to the street.~~

Option 2: ~~As specified in Article 6, a dwelling with an accessory living unit must~~ The property must provide the number of on-site parking space(s) required for the principal dwelling unit as specified in Article 6~~, plus one additional space~~. ~~Only one space serving the lot must provide convenient access to the street.~~

(11) ***Option 1:*** ***Delete current standard.*** ~~An administrative permit for an accessory living unit may be issued to the owner for an initial period of two years from the date of approval. An administrative permit may be extended by the Zoning Administrator for succeeding periods of up to five years based on the applicant's record of compliance with the standards in this subsection.~~

Option 2: An administrative or special permit for an accessory living unit may be issued to the owner for an initial period of ~~two~~ five years from the date of approval. An administrative or special permit may be extended by the Zoning Administrator for succeeding periods of ~~up to~~ five years ~~based on the applicant's record of compliance with the standards in this subsection~~ in accordance with subsections 4102.1.I and 8100.4.D(3)(b).

(12) If the applicable standards ~~above~~ are no longer being met, the accessory living unit may not be occupied as a dwelling unit and the property must meet the occupancy limitations of a single-family dwelling in accordance with subsection 4102.3.A. This standard does not require the removal of any kitchen or other facilities; however, a second kitchen certification must be submitted to the Zoning Administrator that the area will not be used in a manner that constitutes an accessory living unit.

Standards when permitted by right ~~administrative permit~~: *[option to keep administrative permit]*

(13) If it meets the applicable standards, an accessory living unit is allowed by right if it is:

(a) Interior to a single-family detached dwelling; or

(b) Detached on a lot that is a minimum of 36,000 square feet in size. ***[option to revise the minimum lot size[19]]***

[19] If the minimum lot size for a by-right detached ALU is revised, subsection (15) will be revised for consistency.

Figure 4102.7: Interior Accessory Living Units



(14) To maintain the external appearance of a single-family detached dwelling, an interior accessory living unit must meet the following standards. Examples of interior accessory living units are shown in Figure 4102.7.

- **(a)** The ~~An accessory living~~ unit must be ~~wholly contained~~ located within the existing or proposed structure of a single-family detached dwelling unit and must ~~have direct~~ maintain access to the principal dwelling through an interior space that is ~~finished, temperature controlled, and~~ fully enclosed.
- **(b)** A semi-detached unit is connected to the principal dwelling by a hallway, enclosed breezeway, or other similar feature with an external width 12 feet or less. A semi-detached unit with a connection of ten feet or less in length is considered interior. Any semi-detached unit with a connection that exceeds ten feet in length is subject to the detached accessory living unit standards.
- **(c)** Any new external entrance proposed for an accessory living unit must be located on the side or rear façade of the dwelling.
- **(d)** Any proposed garage or carport must be located directly adjacent to any existing garage or carport, and the associated driveway and curb cut must be the same as that which serves the principal dwelling.

~~**(12)** Before occupancy of the accessory living unit, the owner must record a copy of the administrative permit among the land records of Fairfax County. The permit must contain a description of the property and must be indexed in the Grantor Index in the name of the property owner(s).~~

Standards when permitted by special permit:

(15) The accessory living unit must conform to all applicable standards ~~for an administrative permit~~ above, except that the BZA may approve a special permit for an

accessory living unit to modify one or more of the standards as identified in the subsections below:

(a) Subsections (13) and (14)(b) ~~(2)~~, to permit an accessory living unit in:

1. ***Option 1:*** A detached ~~freestanding~~ structure on a lot less than 36,000 square feet~~, but only on a lot of at least two acres~~; or

Option 2: A detached ~~freestanding~~ structure, but only on a lot of at least 15,000 square feet ~~two acres~~ ***[10,500 square feet – two acres]***; or

2. A semi-detached unit with a connection that exceeds ten feet in length;

Figure 4102.8: Detached and Semi-Detached Accessory Living Units

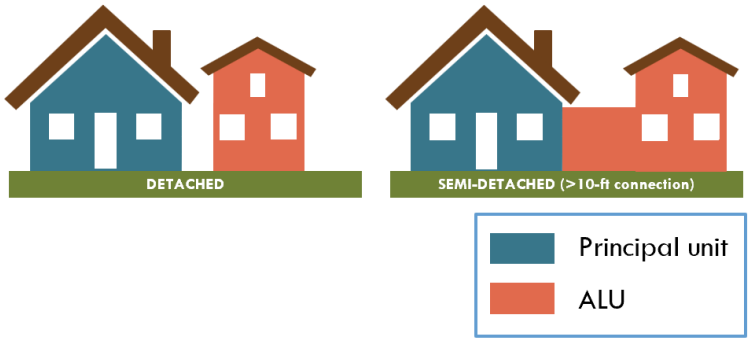

(b) Subsection (14)(c) and (d) ~~(3)~~, to modify the location of any external entrance, garage or carport location, and access from the street;

(c) Subsection (6) ~~(4)(a)~~, to exceed the maximum size ~~for an interior accessory living unit~~; and

(d) ***Option 1:*** ***Delete current standard.*** ~~Subsection (9), when the required on-site parking is not provided.~~

Option 2: Subsection (10) ~~(9)~~, when the required on-site parking is not provided.

~~**(16)** The area devoted to a detached accessory living unit must not exceed 1,200 square feet of gross floor area and must be clearly subordinate to the principal dwelling.~~

~~**(17)** The BZA may require the provision of off-street parking spaces in addition to the requirements specified in Article 6 for a single-family detached dwelling.~~

~~**(18)** The County may inspect the property during reasonable hours and in accordance with subsection 8106.2.D.~~

~~**(19)** Upon the approval of a special permit, the owner will record a copy of the BZA's resolution of approval, including all accompanying conditions among the land records of Fairfax County. The resolution must contain a description of the property and must be indexed in the Grantor Index in the name of the property owner(s).~~

~~**(20)** A special permit for an accessory living unit may only be issued to the owner and approved for an initial period of two years from the date of approval. The special permit may be extended for succeeding periods of up to five years based on the applicant's record of compliance, in accordance with subsection 8100.4.D(3).~~

INSTRUCTION #3: Revise subsection 8100.8 to codify the second kitchen certification process.

8. Building Permits

A. Zoning Review of Building Permits

(1) Zoning approval must be obtained from the ~~The~~ Zoning Administrator ~~must give zoning approval~~ before a building permit can be issued. Without ~~that~~ zoning and building permit approval, no building or structure may be constructed, modified, added to, or demolished if Chapter 61 of the County Code requires a building permit.

(2) A second kitchen certification must be submitted with a building permit application that includes an additional kitchen in conjunction with a dwelling. The certification must confirm that (a) the additional kitchen will not be used in a manner that constitutes an accessory living unit, and occupancy of the dwelling will comply with subsection 4102.3.A; or (b) the additional kitchen will be used as part of an accessory living unit that complies with subsection 4102.7.B.

INSTRUCTION #4: Revise Table 8102.1, Fee Schedule, to delete the renewal fee for a special permit for an accessory living unit.

TABLE 8102.1: FEE SCHEDULE
This table includes standard fees related to approvals under the Zoning Ordinance. Additional fees may apply related to review or approval by other County departments or governmental or quasi-governmental agencies, or in accordance with Appendix Q of the County Code.

APPLICATION TYPE		FEE [1]
SPECIAL PERMITS [2]		
Accessory and Temporary Uses		
Accessory Living Unit	Special Permit	$615
	~~Renewal Fee~~	~~$75~~

INSTRUCTION #5: Revise the definition of an Accessory Living Unit in Section 9103.

Accessory Living Unit
A secondary dwelling unit established in conjunction with and clearly subordinate to a single-family detached dwelling unit. ***[delete "detached"]*** An accessory living unit contains living, sleeping, kitchen, and sanitation areas. A kitchen includes permanent provisions for food preparation and cooking. For the

purpose of this provision, built-in microwave ovens and counter-top appliances are not considered permanent provisions for food preparation and cooking.

This amendment will become effective on November 18, 2026, at 12:01 AM

GIVEN under my hand this 17th day of November 2026.

_____

Jill G. Cooper
Clerk for the Board of Supervisors

ALU Regulations Jurisdictional Research – Nearby Localities

In the table, "NR" means no requirement.

Jurisdiction	Approval Process/ Unit Type	Renewal/ Recordation	Occupancy/ Owner Occupancy	Size (unit and lot)	Parking	Detached Setbacks
Fairfax County (current)	Administrative (interior) Special Permit (interior and detached) Allowed with single-family detached dwellings	Initial renewal 2 years, then 5 years Recordation required	2 people in ALU Property must be owner-occupied	Interior: entire basement (as of 5/10/2023); or 800 SF or 40% of principal dwelling Detached: 1,200 SF 2-acre lot size	1 additional space	5' from side/rear, if height is 8.5' – 12' setback equal to height from rear and out of side setback for district, if height is 12+' (e.g., 20' side setback for R-C – R-1)
Fairfax County **(proposed)**	By right for interior and for detached on lots 36,000 SF and greater; and Special Permit to modify standards or for detached ALU on smaller lots Allowed with single-family detached dwellings	NR	3 people in ALU Owner occupancy NR	1,200 SF or 40% of principal dwelling; entire basement for interior ALU 36,000 SF minimum lot size for detached ALU by right; less than 36,000 SF lot size would require SP for detached ALU	NR	Not allowed in front yard on a lot of 36,000 SF or less; not allowed in front setback on a larger lot 5' from side/rear, if height is 8.5' – 12' setback equal to height from rear and out of side setback for district, if height is 12+' (e.g., 20' side setback for R-C – R-1)

Jurisdiction	Approval Process/ Unit Type	Renewal/ Recordation	Occupancy/ Owner Occupancy	Size (unit and lot)	Parking	Detached Setbacks
Alexandria	Administrative Interior and detached ALUs Allowed with single- and two-family dwellings and townhouses	NR	3 people in ALU Property must be owner-occupied when permit issued	Interior: 1/3 size of principal Detached: first floor 1/3 of principal first floor or 350 - 500 SF, whichever is greater; Max height - principal dwelling or 20' No minimum lot size	NR	1' to 5' from side/rear
Arlington	Administrative permit and certificate of occupancy Interior and detached ALUs Allowed with single-family detached dwellings ALU approval not required if meeting occupancy of the dwelling (sink affidavit instead)	Recordation required; no renewal, but affidavit with change in ownership	3 people in ALU If the property is not owner-occupied, the entire property must be occupied by one family	Entire basement; or for interior or detached: 500 – 750 SF or 35% - 45% of combined GFA, depending on size of principal dwelling No minimum lot size	1 space if no existing parking	Interior lots: 5' from wall to side/rear Corner lots: 5' from wall to side lot line; 10' from eave to to rear lot line 25' from wall to street R-O-W
Fairfax City (Amended July 2026)	Administrative Interior and detached ALUs Allowed with single-family detached dwellings and duplexes	NR, but certification to Zoning Administrator required with change in ownership	Combined occupancy of one household Owner occupancy required	35% of principal dwelling No minimum lot size	Must have required parking for principal dwelling	Not allowed in front yard; 20' rear setback; 8' – 12' side setback, depending on district

Jurisdiction	Approval Process/ Unit Type	Renewal/ Recordation	Occupancy/ Owner Occupancy	Size (unit and lot)	Parking	Detached Setbacks
Falls Church (adopted 4/14/2025)	By right with certificate of occupancy Interior and detached ALUs Allowed with single- and two-family dwellings	NR	4 people in ALU Property must be owner-occupied when building permit and CO issued, except with new construction	Entire basement; or 700 - 1,000 SF, depending on size of dwelling No minimum lot size	NR	8' from side/rear and BZA can reduce to 5' with SP (if height <15') 10' from side/rear (if height 15+') Above one story: any windows that are not clerestory must have a 10' setback
Loudoun	By right Interior and detached ALUs Not limited by type of dwelling unit	NR	Occupancy per building code Owner occupancy NR	1,200 – 2,500 SF or 50% – 70% of principal dwelling No min lot size for detached, but large lots can have more than one ALU	1/ALU	Front setback according to zoning district; 5' from side/rear if no windows or doors on the portion that encroaches
Montgomery (MD)	By right Interior and detached ALUs Allowed with single-family detached dwellings	Not required under zoning, but annual license requirement	2 people 18+ years old in ALU Owner occupancy not required under zoning, but included in licensing	Interior: entire basement or 1,200 SF Detached: 1,200 SF or 10% of lot area, or 50% of footprint of principal dwelling, whichever is least No minimum lot size	1 to 2 additional spaces, except within 1 mile of Metro or MARC station	Side setback same as principal dwelling; 12' rear setback; larger setbacks required for ALUs that are longer than 24'

Note: Prince William County had not adopted accessory dwelling unit regulations and will be subject to the new state legislation.